NEW H-BOX SHELF OPTION

Features

- Sizes available for all H-Boxes, utilizing full box depth.
- Shelf height is adjustment in 2" increments.
- Quick and easy weld free installation.
- Each kit includes: 2 plate assemblies
  2 bracket assemblies
  1 shelf

NOTE: Dividers sold separately

BOX LENGTH	BOX DEPTH	NEW SHELF KIT	DIVIDER
18"	18"	65004	30547
24"	12"	65005	65165
24"	16"	65006	65166
24"	18"	65007	30547
24"	24"	65008	30548
30"	12"	65009	65165
30"	16"	65010	65166
30"	18"	65012	30547
30"	24"	65013	30548
36"	16"	65014	65166
36"	12"	65015	65165
36"	18"	65016	30547
36"	24"	65017	30548
42"	18"	65018	30547
42"	24"	65019	30548
48"	18"	65020	30547
48"	24"	65021	30548
56"	18"	65022	30547
56"	24"	65023	30548
60"	18"	65024	30547
60"	24"	65025	30548
72"	18"	65026	30547
72"	24"	65027	30548

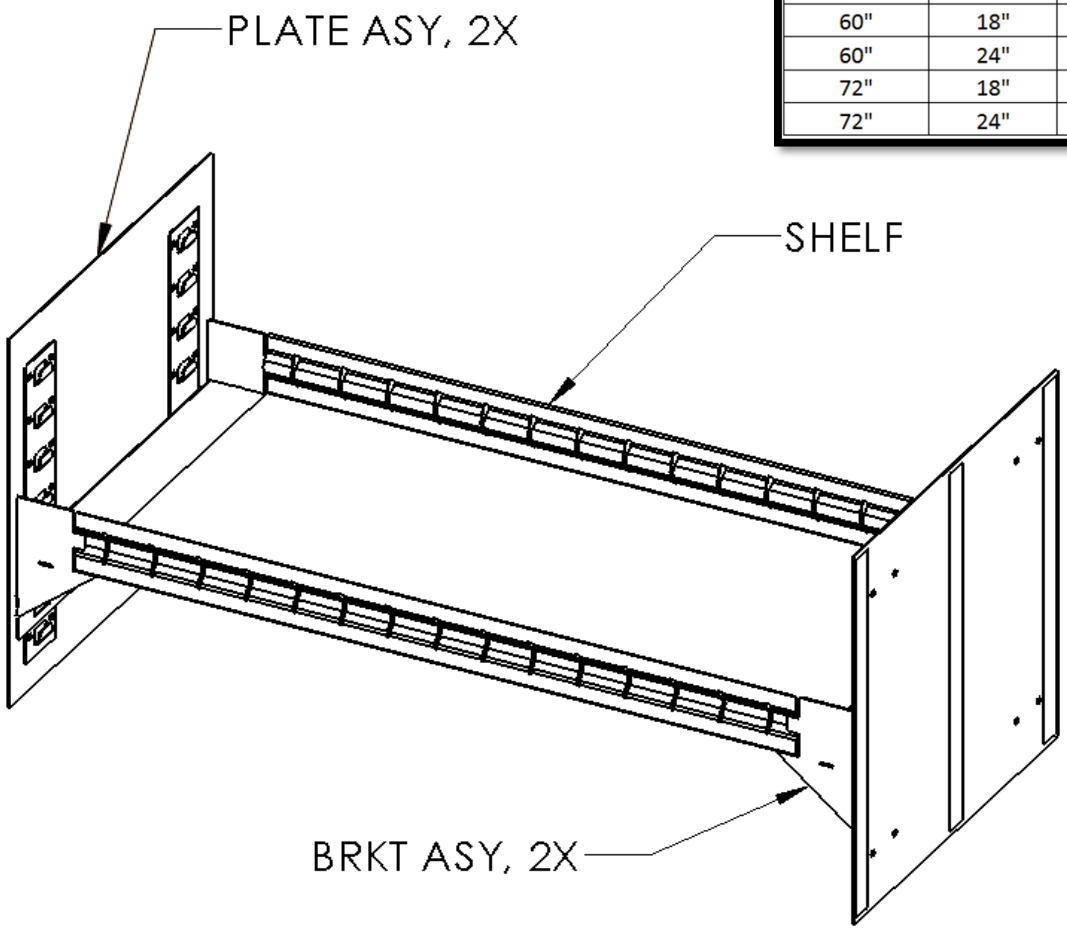

Refer to installation bulletin P3035 for instructions